Balanced Scorecard

What’s it all about?

P.U.D.
CHELAN COUNTY
POWER

The name …

- Balance
- Scorecard

P.U.D.
CHELAN COUNTY
POWER

I’m an employee; tell me more ...

- Do the right work at the right time
- Keep our eyes on the dashboard
- Watch out for trouble on the road
- Keep on learning

P.U.D.
CHELAN COUNTY
POWER

I’m an employee; tell me more ...

- We’ll be doing the right thing
- We’ll understand how our work is making a difference
- We’ll see the results in the satisfied faces of our customers

P.U.D.
CHELAN COUNTY
POWER

The strategy map

P.U.D.
CHELAN COUNTY
POWER

Chelan County PUD

V3

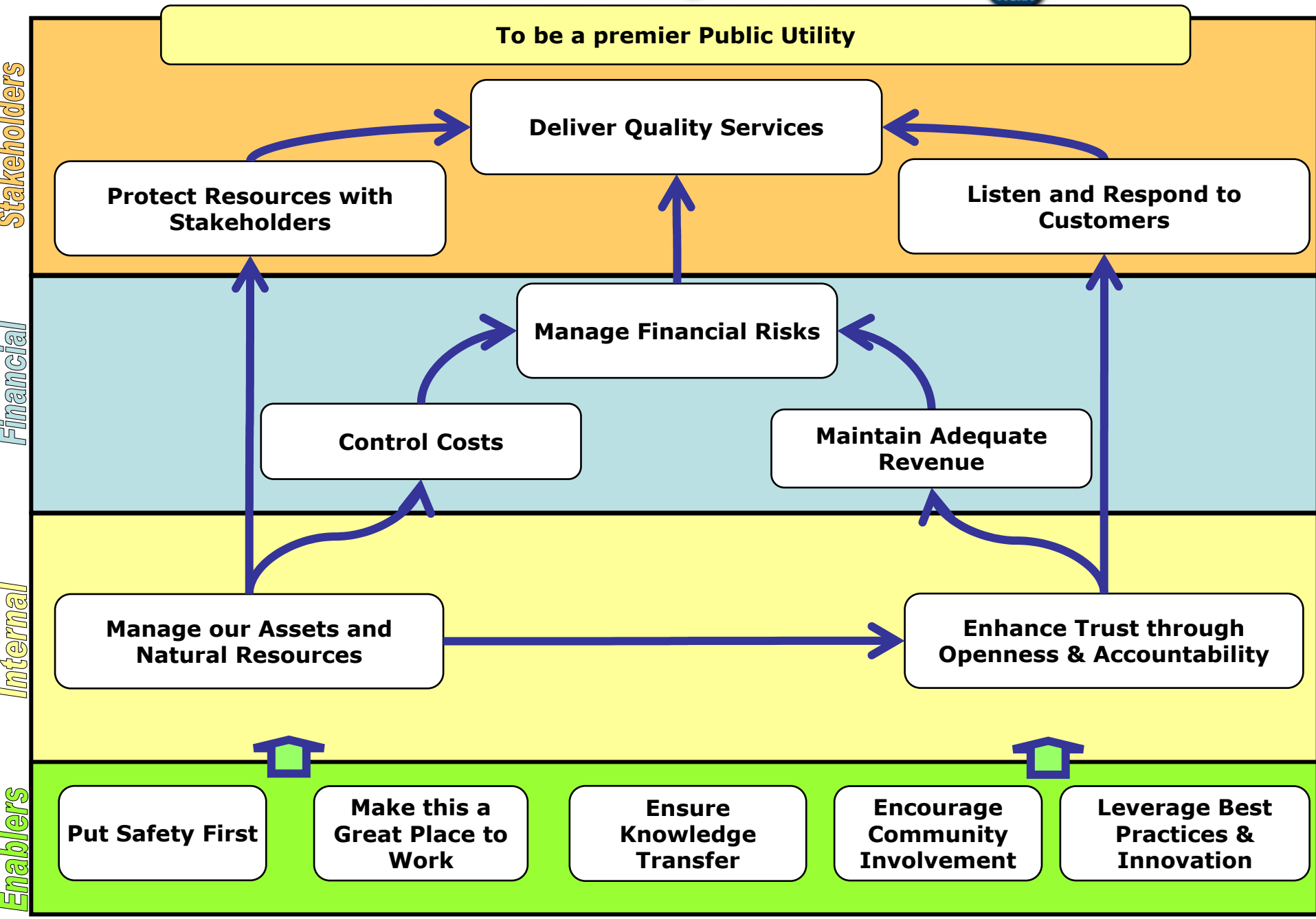

Chelan County PUD

V3

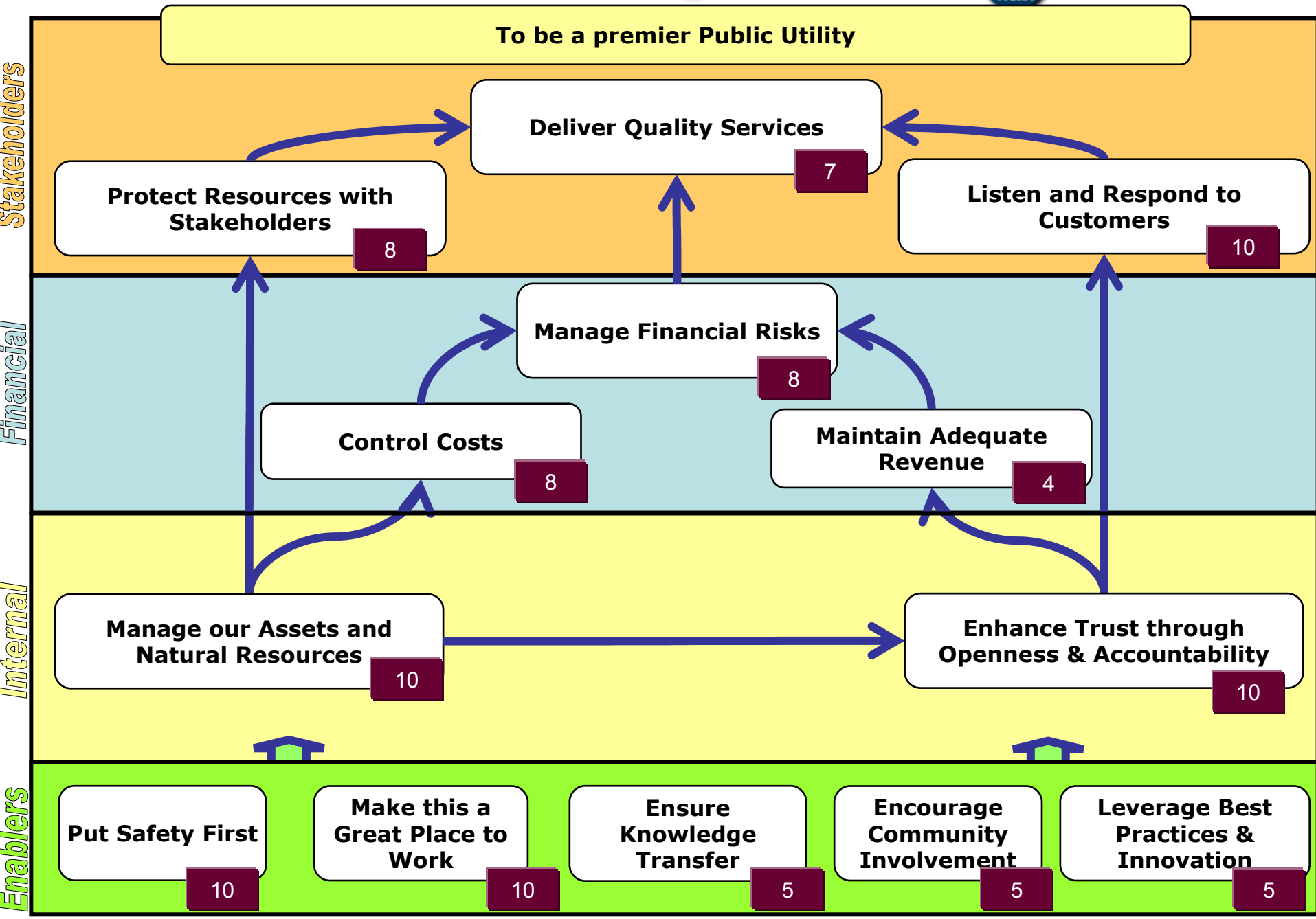

Departments will have their own maps

P.U.D.
CHELAN COUNTY
POWER

I’m a customer; tell me more ...

- You see where we put our focus
- You can watch for regular reports on our progress
- You can have a say in setting new priorities

P.U.D.
CHELAN COUNTY
POWER

Once again, what is it?

- Not for showing how good we are
- Not for punishment or blame
- For LEARNING to prompt ACTION

P.U.D.
CHELAN COUNTY
POWER

Next steps

- Customer feedback
- Employee feedback
- Continue to develop indicators
- Share, listen and learn
  - Quarterly results to board

P.U.D.
CHELAN COUNTY
POWER

Questions?
Comments?

Deliver Quality Services

Stakeholder

7

- **What is the Strategic Objective?**
  - Quality Services means: safe, reliable utility services at the best price
  - Balancing competing demands for our resources among Stakeholders & Customers (not necessarily at lowest cost)
    - Stakeholders means: Public; Employees; Suppliers; Bond Holders; Regulatory Agencies; Elected Officials; Resource Agencies; Power Purchasers
    - Customers means: Ratepayers of Chelan County: Service Providers
- **Why is it important?**
  - Stakeholders needs should be served
  - Keep the customer satisfied!
- **Indicator:**
  - # Customer Complaints
- **Drill-Down:**
  - Complaint detail (by service)
  - Positive customer feedback

Cascading the Strategy Map

Business Units and Shared Services Scorecards

Chelan County PUD

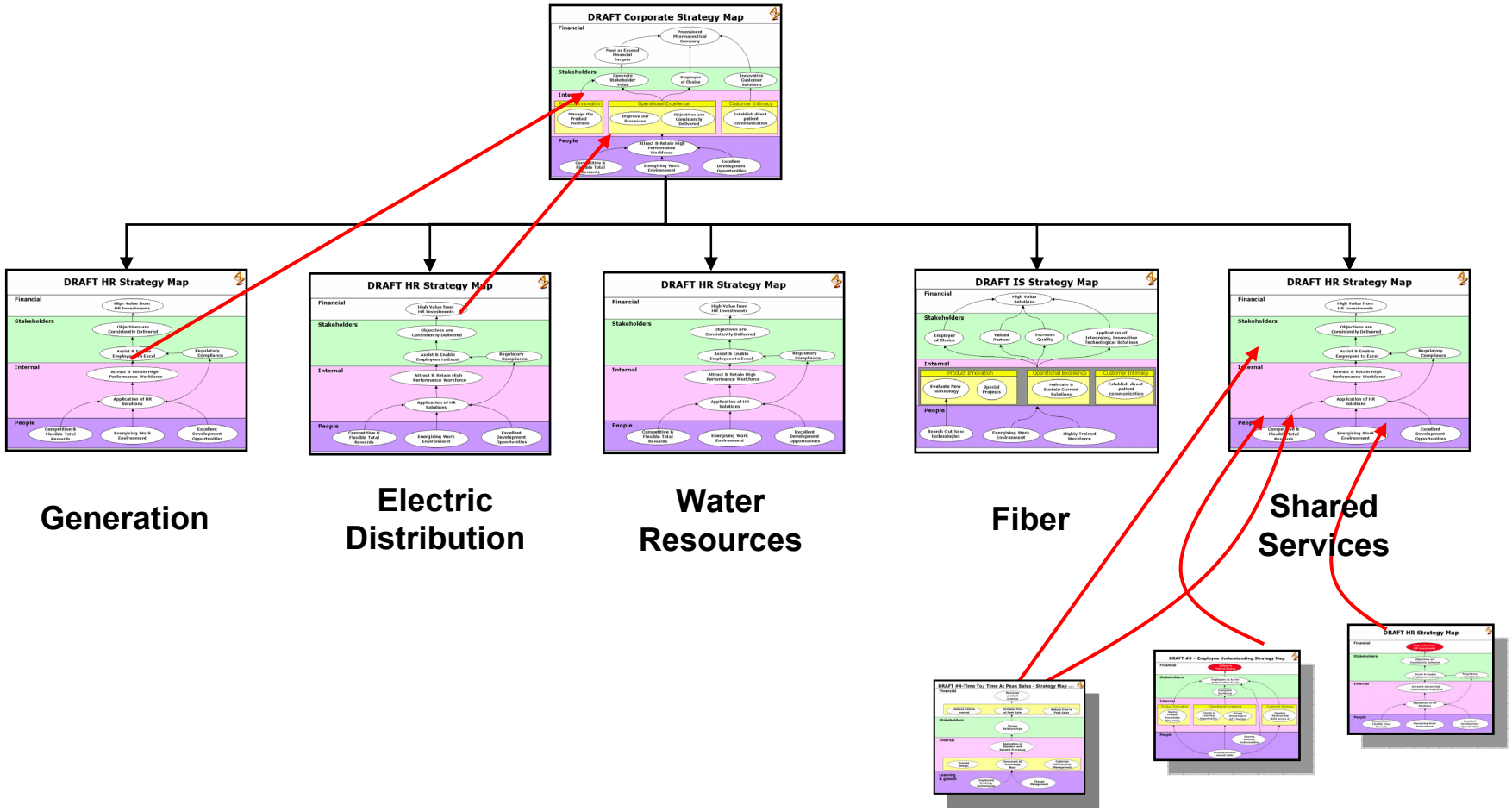

©pm2.ca

IT Projects Analysis

Project	Task ID	Business Area	Dept	Budg	Project Title	Stategic Value 3=High	Implementation 3=Easy	Priority	Stakeholder: Deliver Quality Services	Stakeholder: Listen and Respond to Customers	Stakeholder: Protect Resources with Stakeholders	Financial: Manage Financial Risks	Financial: Maintain Adequate Revenue	Financial: Control Costs	Internal: Enhance Trust through Openness & Accountability	Internal: Manage our Assets and Natural Resources	Enablers: Put Safety First	Enablers: Make this a Great Place to Work	Enablers: Ensure Knowledge Transfer	Enablers: Encourage Community Involvement	Enablers: Leverage Best Practices & Innovation
					Weighting --->				7	10	8	8	4	8	10	10	10	10	5	5	5
1	2341	Appl Develop			Hydro Data Phase I	3	2					0.4				0.3	0.1				0.2
2	2351	Appl Develop			Hydro Data Phase 2	3	1					0.4				0.4					0.2
3	2321	Appl Develop			Cable Bridge Software for Networks	3	2		0.4				0.4	0.1							0.1
4	1031	Appl Develop			Dig / Locate Solution	2	2		0.2	0.2				0.2			0.2				0.2
5	951	Appl Develop			Web Content Solution	3	1		0.2	0.2					0.2					0.2	0.2
6	2381	Appl Develop			Power Marketing Data Exchange	3	2				0.4	0.3									0.3
7	1311	Operations / Systems			Imprevada Single Sign On	3	3				0.4					0.2					0.4
8	1061	Operations / Systems			Telephone Voice Mail Servers	2	2		0.2	0.2							0.2				0.4
9	1051	Operations / Systems			HP Tape Library & SAN Direct Backu	2	2		0.1			0.2				0.4					0.3
10	841	Operations / Systems			Network Protocol & Wireless Prototyp	1	2									0.3		0.3			0.4
11	1041	Operations / Systems			Perimiter Security Hardware	2	3									0.2	0.3				0.5
12	721	Operations / Systems			Disaster Recovery	3	1		0.2		0.2	0.2				0.2					0.2
13	2391	Operations / Systems			Asset Management Total Cost of Ow	2	1							0.5							0.5
14	591	Operations / Systems			CRM Completion	2	2							0.3				0.2			0.5
15	2221	Asset Management			Maximo 5.x Upgrade	2	1		0.1			0.1				0.4	0.1				0.3
16	2211	Asset Management			Supply Chain Support	3	2							0.4	0.2				0.1		0.3
17	1191	Asset Management			Fleet Service to Maximo	3	3							0.3		0.4					0.3
18	801	Asset Management			CAD Management Software Replace	2	2									0.4	0.2		0.2		0.2
19	2201	Asset Management			Syclo Mobile Maximo Expansion	1	3									0.4	0.1		0.1		0.4
20	2371	PeopleSoft Support			HRMS Support	3	2		0.1					0.3	0.2				0.1		0.3
21	2231	PeopleSoft Support			Maximo / Time & Labor Integration (T	2	2							0.4		0.2		0.2			0.2
22	271	PeopleSoft Support			HRMS Core Functionality / e Applicat	2	2							0.2	0.3			0.4			0.1
23	521	PeopleSoft Support			Time Entry / Approval Enhancements	2	2							0.4				0.4			0.2
24	1961	PeopleSoft Support			Application Upgrade Study	2	3							0.3		0.3					0.4
25	201	PeopleSoft Support			Cash Management	2	2					0.1	0.2	0.2		0.2					0.3
26	231	PeopleSoft Support			Asset Management	2	2							0.2		0.2					0.6
27	1541	PeopleSoft Support			Reporting (Project)	3	2					0.1	0.1	0.2	0.3	0.1					0.2
28	1591	PeopleSoft Support			Portal	2	2								0.2			0.4			0.4
29	991	PeopleSoft Support			EPM Enterprise Warehouse	2	2					0.1	0.1	0.2	0.3	0.1					0.2
30	2361	PeopleSoft Support			Finance Support	3	2							0.3	0.3				0.1		0.3
31	191	PeopleSoft Support			Governance / Policies & Proceedures	2	2							0.2		0.2		0.2			0.4
32	641	PeopleSoft Support			CIS Support	3	2		0.1					0.3	0.2				0.1		0.3
33	2451	PeopleSoft Support			Late Payment Charge Solution	3	2		0.1			0.3	0.2			0.2					0.2
34	2461	PeopleSoft Support			ITRON Handheld Interface Improvem	1	2		0.2				0.2		0.2						0.4
35	2471	PeopleSoft Support			Revise Bill Format	3	2		0.4	0.3			0.1							0.1	0.1
36	2481	PeopleSoft Support			Analyze Rate Increase Scenario	2	2					0.3	0.3			0.1					0.3
37	2491	PeopleSoft Support			Monthly Reading Implementation	3	2		0.4	0.3			0.1							0.1	0.1
					# of projects				2.7	1.2	1.0	2.5	1.7	5.0	2.4	5.2	1.2	2.1	0.7	0.4	10.9
					Percentage				7.3%	3.2%	2.7%	6.8%	4.6%	13.5%	6.5%	14.1%	3.2%	5.7%	1.9%	1.1%	29.5%
					# of Projects (green)				0.4	0	0	0.8	0.4	0.1	0	0.7	0.1	0	0	0	0.5
					% green				0.0108	0	0	30.8%	0.0108	3.8%	0.0%	26.9%	3.8%	0	0	0.0%	19.2%
									1.1%			35.7%			26.9%		23.1%				

Linking Scorecard to Accountabilities

The Balanced Scorecard enables the development of strategically aligned roles and personal accountabilities and an organization structure that enables strategic success

Strategy to Action

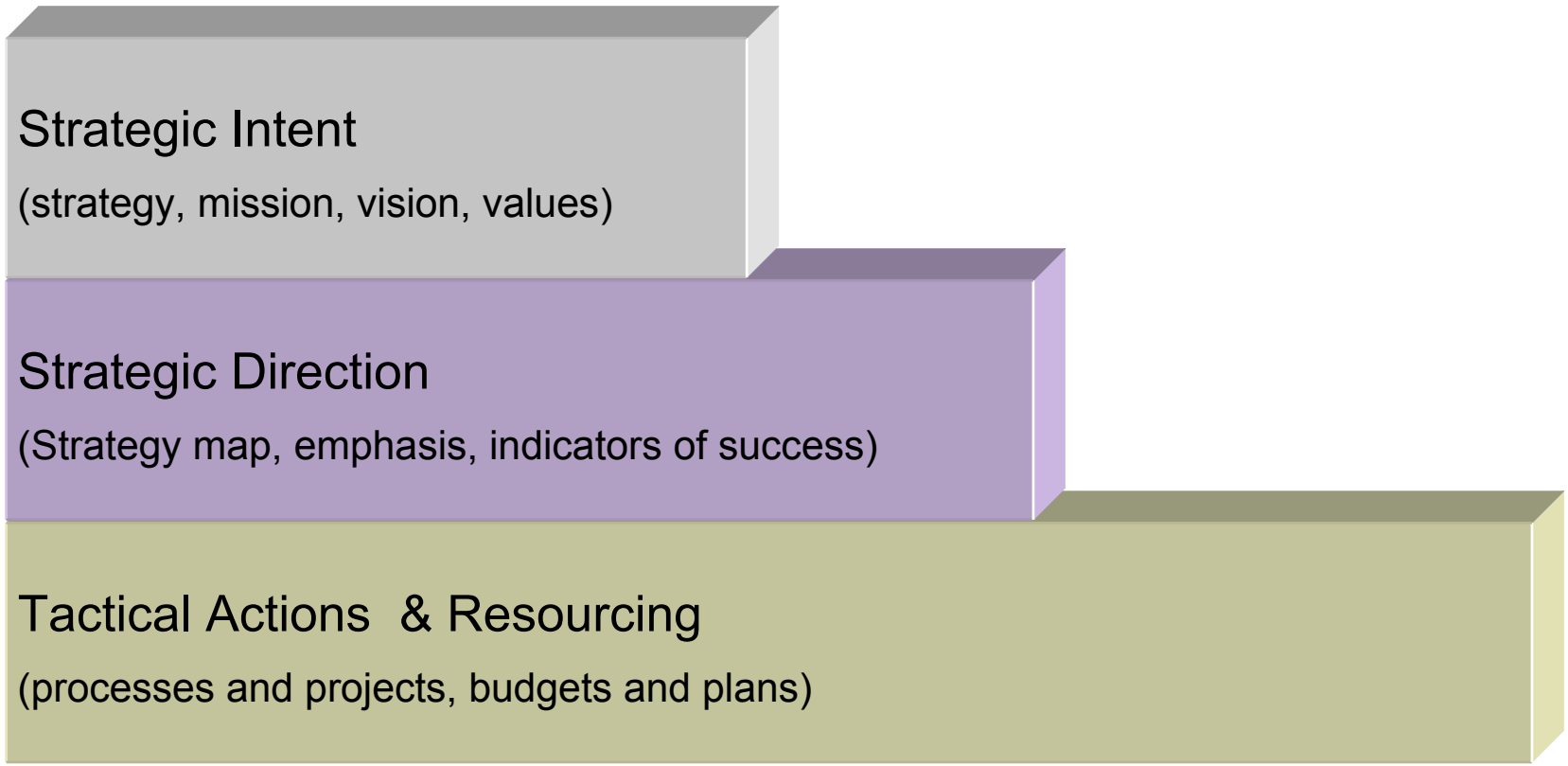

The Strategy Map is the most visual of the documents you'll be seeing in this Balanced Scorecard process. We'll go through it step by step.

The map has four bands. Inside each band are bubbles that contain things the District wants to focus on.

The first band is the Enabler band. This band include things that define the district's values, competencies, skills, technologies and organizational culture. Things in this band help employees to be ready to focus on what is important to the District. They include…

The next band is the "Internal" band. Things in this band are how we will do business every day while keeping our focus on what is important. They are…

The next band is the Financial band. Things in this band focus the PUD on being prudent and responsible with the public's money. Including…

The top band is the Stakeholder band. Our stakeholders are our customers, employees, local governmental agencies and others with an interest in the PUD. This band is where our stakeholders get what they value most from the PUD. These are…

At the very top of the map we have included a vision of what we want to be. Actually this was developed by our customer Mission/vision focus group recently.